CONFIDENTIAL NOTICE: This drawing and the designs, specifications and engineering information disclosed hereon are the property of Eberhard Manufacturing Company and are not to be disseminated or reproduced without express written consent. The drawing is loaned in confidence and does not by implication of the sender divulge any information to competitors. It is provided with the understanding that the sender disclosed hereon in confidence and not to use our parts that are in any way the property of Eberhard Manufacturing Company, Division of the Eastern Company, 9701 Cedar Road, Cleveland, Ohio 44106-6112 © 2005 EBERHARD MFG. CO.

REVISION HISTORY					
REV	DESCRIPTION	EM	DATE	REV BY	APV BY
*	RELEASED TO PRODUCTION: REF PP15195-A	EM 8984	03/15/2005	KAB	MR
1	REVISED DIMENSIONS	EM 8968	1/10/2005	SAA	LBW

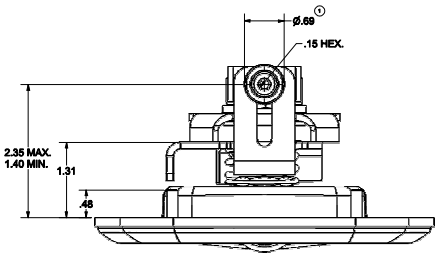

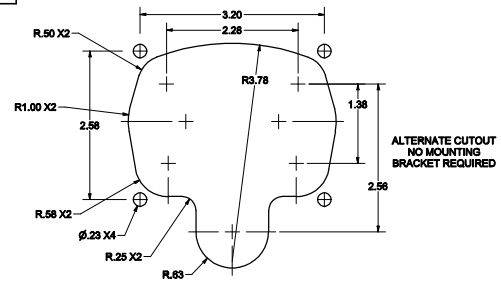

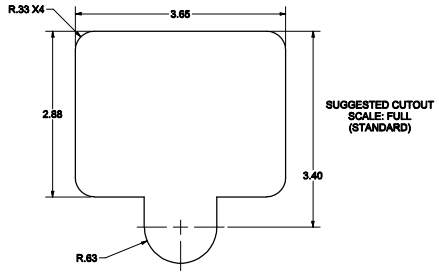

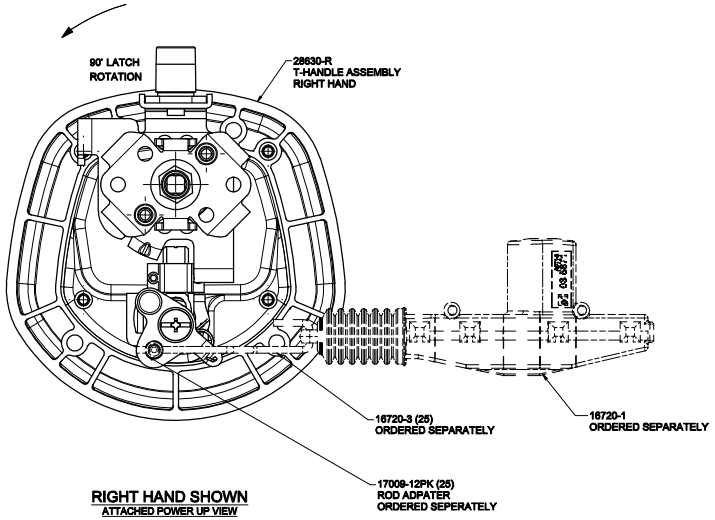

RIGHT HAND SHOWN
ATTACHED POWER UP VIEW

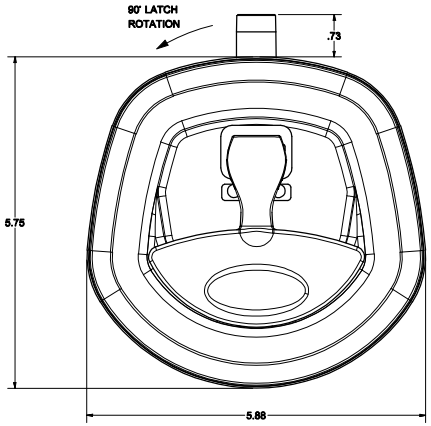

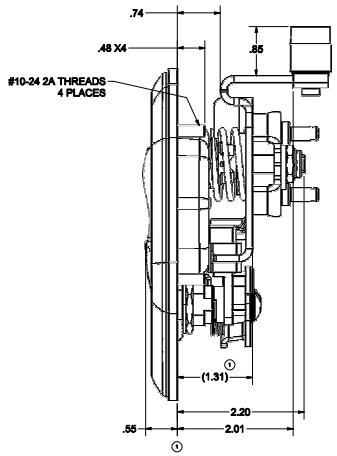

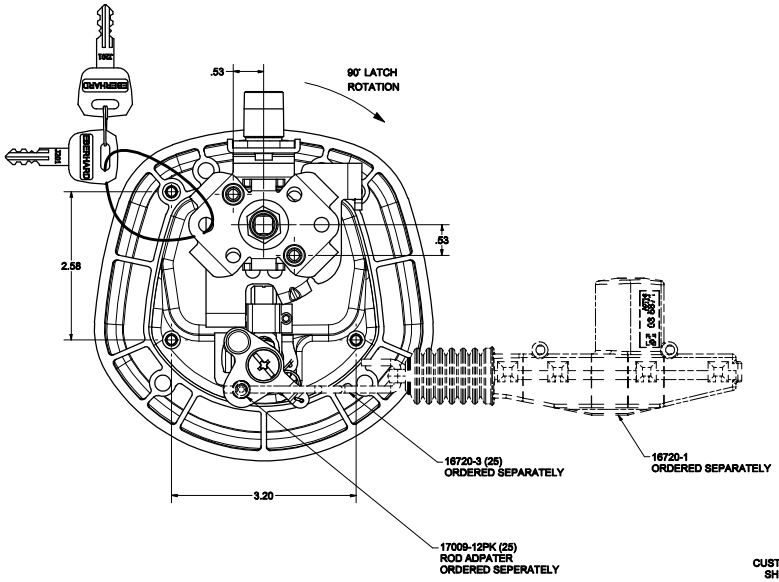

NOTES:
1. FINISHES:
   A. BRIGHT POLISHED RECEPTACLE AND CHROME HANDLE: FC (03)
   B. BLACK POWDER (TEXTURED) RECEPTACLE AND HANDLE, FC (42)
   C. BLACK POWDER (TEXTURED) RECEPTACLE AND CHROME HANDLE: FC (35)
2. 35 IN-LBS MAX. TORQUE ON MOUNTING STUDS
3. KEY CYLINDER WITH 10 KEY CHANGES, J201 THRU J210
   SUPPLIED WITH TWO DOUBLE BITTED KEYS
   EXAMPLE ORDER AS: P-28630-R/L-JXXX-XX
   FINISH CODE (SEE NOTE #1)
   KEY NUMBER

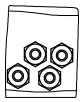

NUT PACK
SCALE 1 : 1

PATENTED

ASSEMBLY P/N	MOUNTING BRACKET KIT P/N	NUT PACK
P-28630-RL	NONE	NONE
P-28630-RLPK	NONE	INCLUDED
P-28630A-URL	28400A-60U	NONE
P-28630B-URL	28400B-60U	NONE
P-28630C-URL	28400C-60U	NONE

THIS DOCUMENT IS IN ACCORDANCE WITH ASME Y14.100-2000

UNLESS OTHERWISE SPECIFIED TOLERANCES ARE AS FOLLOWS:	SI	MM
ANGLES:	±2°	±2°
2 PLACE DEC.:	±.01	±.25
3 PLACE DEC.:	±.005	±.13
ALL HOLES:	±.005	±.13

DATE 01/15/2005
DRAWN KAB
SCALE 1:1
CAD LIB MR

EBERHARD MANUFACTURING CO.
DIVISION OF
THE EASTERN COMPANY
CLEVELAND, OHIO 44106-6112

NAME KEY LOCKING / PADLOCKABLE COMPRESSION LATCH - POWER LOCKING

MATERIAL
PART NUMBER P-28630-RL
SHEET

CUSTOMER PRINT
SHEET 1 OF 2

LEFT HAND SHOWN
RIGHT HAND OPPOSITE

C:\TEMP\Wo0c0.526a-4388-a59c-c4a91b0c1c78\Pro\28630UR-28630-RL CH 8911.drw