CONFIDENTIAL NOTICE: This drawing and the designs, specifications and engineering information disclosed hereon are the property of Eberhard Manufacturing Company and are not to be disseminated or reproduced without express written consent. The drawing is loaned in confidence and then only for consideration of the matter disclosed hereon. In accepting loan of this drawing, recipient agrees to keep it and the matter disclosed hereon in confidence and not to use nor permit their use in any way detrimental to Eberhard Manufacturing Company, Division of the Eastern Company, 21244 Drake Road, Cleveland, Ohio 44149-0712 © 2015 EBERHARD MFG. CO.

REVISION HISTORY

REV	DESCRIPTION	EN	DATE	REV BY	APVD BY
	RELEASED. WAS M11129-RL	5635	1-3-2014		
1	REVISED NOTE #3 J38/J3 WAS M11129	5945	2-14-2014		
2	PATENTED WAS PATENT PENDING. REVISED VIEW	5484	12-19-14		
3	ADDED .2 LB MAX/1.46 MIN. ADJUSTMENT (.80) .93 DIA. - 16 HEX.	6980	1-9-15		
4	MODIFIED LATCH & ROLLER SUB-ASSEMBLY	5759	7-1-2016	KAB	MR

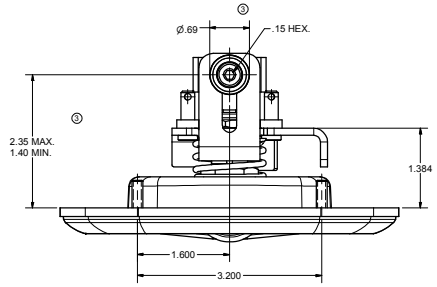

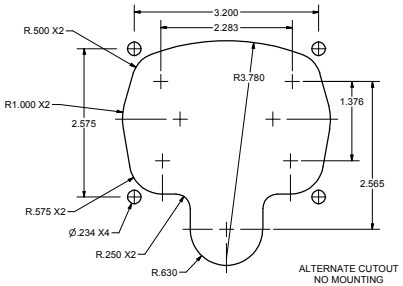

ALTERNATE CUTOUT
NO MOUNTING
BRACKET REQUIRED

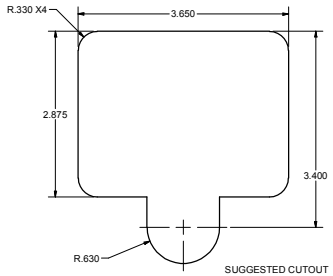

SUGGESTED CUTOUT
SCALE: FULL
(STANDARD)

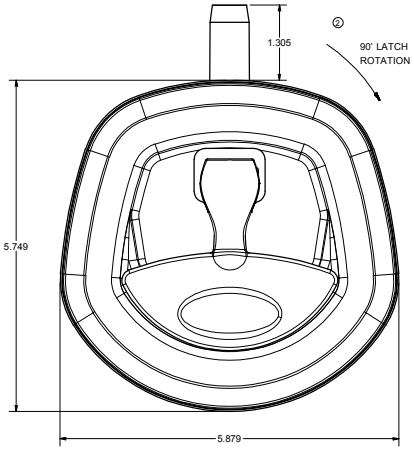

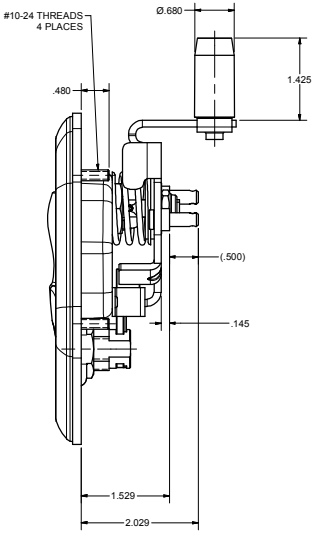

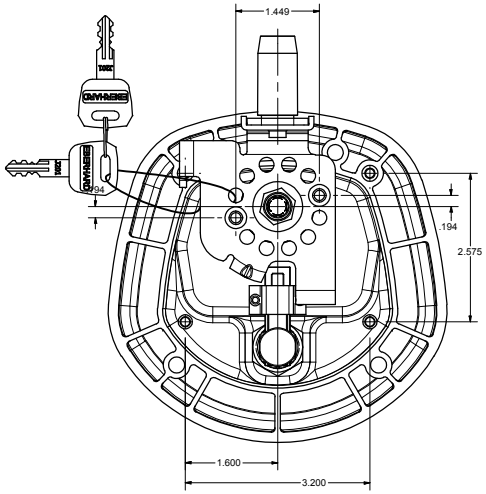

① NOTES:
1. FINISHES:
   A. BRIGHT POLISHED RECEPTACLE AND CHROME HANDLE: FC (03)
   B. BLACK POWDER (TEXTURED) RECEPTACLE AND HANDLE, FC (42)
   C. BLACK POWDER (TEXTURED) RECEPTACLE AND CHROME HANDLE: FC (35)
2. 35 IN-LBS MAX. TORQUE ON MOUNTING STUDS
3. KEY CYLINDER WITH 10 KEY CHANGES, J201 THRU J210
   SUPPLIED WITH TWO DOUBLE BITTED KEYS (NOT SHOWN)
   EXAMPLE ORDER AS: 28435-R/L-JXXX-XX
   - FINISH CODE (SEE NOTE #1)
   - KEY NUMBER

② PATENTED

ASSEMBLY P/N	PANEL THICKNESS	MOUNTING BRACKET KIT P/N	CUTOUT TYPE
28435-RL	.047	NONE	ALTERNATE
28435A-URL	.047	28400A-60U	STANDARD
28435B-URL	.079	28400B-60U	STANDARD
28435C-URL	.135	28400C-60U	STANDARD

THIS DOCUMENT IS IN ACCORDANCE WITH ASME Y14.10-2009

LINEAR MEASURE: INCH

UNLESS OTHERWISE SPECIFIED TOLERANCES ARE AS FOLLOWS

	mm	inch
ANGLES:	± 2°	± 2°
2 PLACE DEC.:	± .03	± .76
3 PLACE DEC.:	± .015	± .38
ALL HOLES:	± .005	± .13

DATE 1/3/2014
DR BY GAL
SCALE
CHK BY

CUSTOMER PRINT
SHEET 1 OF 2

RIGHT HAND SHOWN
LEFT HAND OPPOSITE

EBERHARD MANUFACTURING CO.
DIVISION OF
THE EASTERN COMPANY
CLEVELAND, OHIO 44149-0712

NAME: KEY LOCKING COMPRESSION LATCH - THREE POINT, LOW PROFILE - LONG ROLLER

MATERIAL | PART NUMBER: 28435-RL | CHART

C:\Working_Folder\Archive\Proj\28435\28435-RL CH SH1.dw